Second Edition June 2005

QIAprep® Miniprep Handbook

For purification of molecular biology grade DNA

Plasmid
Large plasmids (>10 kb)
Low-copy plasmids and cosmids
Plasmid DNA prepared by other methods

Trademarks: QIAGEN®, QIAprep®, BioRobot®, R.E.A.L.®, TurboFilter® (QIAGEN); DH5α™ (Invitrogen); pBluescript® (Stratagene); pGEM® (Promega Corp.); Beckman® (Beckman Instruments, Inc); Finntip®, Multistepper® (Thermo Electron Oy Corporation); Impact® (Matrix Technologies Corporation, USA); Minifuge® (Heraeus Instruments GmbH).

The PCR process is covered by the foreign counterparts of U.S. Patents Nos. 4,683,202 and 4,683,195 owned by F. Hoffmann-La Roche Ltd.

QIAGEN workstations and kits are intended as general-purpose devices. No claim or representation is intended for their use to identify any specific organism or for a specific clinical use (diagnostic, prognostic, therapeutic, or blood banking). It is the user's responsibility to validate the performance of QIAGEN workstations and kits for any particular use, since their performance characteristics have not been validated for any specific organism. QIAGEN workstations and kits may be used in clinical diagnostic laboratory systems after the laboratory has validated their complete system as required by CLIA '88 regulations in the U.S. or equivalents in other countries.

© 2002–2005 QIAGEN, all rights reserved.

Contents

Kit Contents **4**
Storage **7**
Quality Control **7**
Product Use Limitations **7**
Product Warranty and Satisfaction Guarantee **8**
Technical Assistance **8**
Safety Information **9**
Introduction **10**
Principle 11
Using LyseBlue reagent 14
Important Notes **15**
Guidelines for QIAvac manifolds 18
Protocols
Plasmid DNA Purification Using the QIAprep Spin Miniprep Kit
and a microcentrifuge 22
and 5 ml collection tubes 23
and a vacuum manifold 24
Plasmid DNA Purification Using the QIAprep 8 Miniprep Kit **28**
Plasmid DNA Purification Using the QIAprep 8 Turbo Miniprep Kit **31**
Plasmid DNA Purification Using the QIAprep 96 Turbo Miniprep Kit **33**
Troubleshooting Guide **36**
Appendix A: Background Information **39**
Growth of bacterial cultures 39
Preparation of cell lysates 42
Appendix B: Agarose Gel Analysis of Plasmid DNA **43**
Appendix C: Special Applications **44**
Purification of low-copy plasmids and cosmids 44
Purification of plasmid DNA prepared by other methods 44
References **45**
Ordering Information **46**
QIAGEN Distributors **51**

Kit Contents

QIAprep Spin Miniprep Kit	**(50)**	**(250)**
Catalog no.	**27104**	**27106**
QIAprep Spin Columns	50	250
Buffer P1	20 ml	70 ml
Buffer P2	20 ml	70 ml
Buffer N3*	30 ml	140 ml
Buffer PB*	30 ml	150 ml
Buffer PE (concentrate)	2 x 6 ml	55 ml
Buffer EB	15 ml	55 ml
RNase A†	200 µl	700 µl
Collection Tubes (2 ml)	50	250
Handbook	1	1

QIAprep 8 Miniprep Kit	**(50)**
Catalog no.	**27144**
QIAprep 8 Strips	50
Buffer P1	140 ml
Buffer P2	140 ml
Buffer N3*	250 ml
Buffer PB*	500 ml
Buffer PE (concentrate)	2 x 100 ml
Buffer EB	2 x 55 ml
RNase A‡	140 µl
Collection Microtubes (1.2 ml)	55 x 8
Caps for QIAprep Strips	55 x 8
Caps for Collection Microtubes	55 x 8
Handbook	1

* Buffers N3 and PB contain chaotropic salts which are irritants and not compatible with disinfecting agents containing bleach. Take appropriate laboratory safety measures and wear gloves when handling. See page 9 for further information.

† Provided as a 10 mg/ml solution.

‡ Provided as a 100 mg/ml solution.

QIAprep 8 Turbo Miniprep Kit	**(10)**	**(50)**
Catalog no.	**27152**	**27154**
TurboFilter® 8 Strips	10	50
QIAprep 8 Strips	10	50
Buffer P1	40 ml	125 ml
Buffer P2	40 ml	125 ml
Buffer N3*	60 ml	2 x 125 ml
Buffer PB*	100 ml	500 ml
Buffer PE (concentrate)	2 x 20 ml	2 x 100 ml
Buffer EB	55 ml	2 x 55 ml
RNase A	400 µl†	125 µl‡
Collection Microtubes (1.2 ml)	13 x 8	55 x 8
Caps for QIAprep Strips	13 x 8	55 x 8
Caps for Collection Microtubes	13 x 8	55 x 8
Handbook	1	1

* Buffers N3 and PB contain chaotropic salts which are irritants and not compatible with disinfecting agents containing bleach. Take appropriate laboratory safety measures and wear gloves when handling. See page 9 for further information.

† Provided as a 10 mg/ml solution.

‡ Provided as a 100 mg/ml solution.

QIAprep 96 Turbo Miniprep Kit	(4)	(24)
Catalog no.	**27191**	**27193**
TurboFilter 96 Plates	4	24
QIAprep 96 Plates	4	24
Buffer P1	125 ml	1 x 700 ml, 1 x 125 ml
Buffer P2	125 ml	1 x 700 ml, 1 x 125 ml
Buffer N3*	2 x 80 ml	1 x 1000 ml, 1 x 80 ml
Buffer PB*	500 ml	6 x 500 ml
Buffer PE (concentrate)	2 x 100 ml	5 x 200 ml, 2 x 100 ml
Buffer EB	2 x 55 ml	1 x 55 ml, 2 x 250 ml
RNase A†	1 x 125 µl	1 x 125 µl, 1 x 700 µl
Tape Pads	1	6
Rack of Collection Microtubes (1.2 ml)	4	24
Caps for Collection Microtubes	55 x 8	6 x 55 x 8
Flat-Bottom Blocks and Lids	4	24
Handbook	1	1

* Buffers N3 and PB contain chaotropic salts which are irritants and not compatible with disinfecting agents containing bleach. Take appropriate laboratory safety measures and wear gloves when handling. See page 9 for further information.

† Provided as a 100 mg/ml solution.

Storage

QIAprep Miniprep Kits should be stored dry at room temperature (15–25°C). Kits can be stored for up to 12 months without showing any reduction in performance and quality. For longer storage these kits can be kept at 2–8°C. If any precipitate forms in the buffers after storage at 2–8°C it should be redissolved by warming the buffers to 37°C before use.

After addition of RNase A and optional LyseBlue reagent, Buffer P1 is stable for 6 months when stored at 2–8°C. RNase A stock solution can be stored for two years at room temperature.

Quality Control

In accordance with QIAGEN's ISO-certified Total Quality Management System, each lot of QIAprep Miniprep Kit is tested against predetermined specifications to ensure consistent product quality. DNA binding capacity is tested by determining the recovery obtained with 10 µg and 20 µg of various plasmid DNAs. The DNA yield of QIAprep Miniprep Kits is tested by preparing high-copy plasmid DNA from 1–5 ml overnight culture in LB medium and assaying the DNA yield spectrophotometrically. The quality of isolated DNA is checked by restriction digestion, agarose gel electrophoresis, and spectrophotometry.

Product Use Limitations

QIAprep Miniprep Kits are developed, designed, and sold for research purposes only. They are not to be used for human diagnostic or drug purposes or to be administered to humans unless expressly cleared for that purpose by the Food and Drug Administration in the USA or the appropriate regulatory authorities in the country of use. All due care and attention should be exercised in the handling of many of the materials described in this text.

Product Warranty and Satisfaction Guarantee

QIAGEN guarantees the performance of all products in the manner described in our product literature. The purchaser must determine the suitability of the product for its particular use. Should any product fail to perform satisfactorily due to any reason other than misuse, QIAGEN will replace it free of charge or refund the purchase price. We reserve the right to change, alter, or modify any product to enhance its performance and design. If a QIAGEN product does not meet your expectations, simply call your local Technical Service Department. We will credit your account or exchange the product — as you wish.

A copy of QIAGEN terms and conditions can be obtained on request, and is also provided on the back of our invoices. If you have questions about product specifications or performance, please call QIAGEN Technical Services or your local distributor (see back cover).

Technical Assistance

At QIAGEN we pride ourselves on the quality and availability of our technical support. Our Technical Service Departments are staffed by experienced scientists with extensive practical and theoretical expertise in molecular biology and the use of QIAGEN products. If you have any questions or experience any difficulties regarding QIAprep Miniprep Kits, or QIAGEN products in general, please do not hesitate to contact us.

QIAGEN customers are a major source of information regarding advanced or specialized uses of our products. This information is helpful to other scientists as well as to the researchers at QIAGEN. We therefore encourage you to contact us if you have any suggestions about product performance or new applications and techniques.

For technical assistance and more information please call one of the QIAGEN Technical Service Departments or local distributors (see back cover).

Comprehensive background information on plasmid preparation procedures and common plasmid applications — in addition to kit selection guides, frequently asked questions, and information about our purification technologies — can be found on our plasmid Web page www.qiagen.com/goto/plasmidinfo .

Safety Information

When working with chemicals, always wear a suitable lab coat, disposable gloves, and protective goggles. For more information, please consult the appropriate material safety data sheets (MSDSs). These are available online in convenient and compact PDF format at www.qiagen.com/ts/msds.asp where you can find, view, and print the MSDS for each QIAGEN kit and kit component.

CAUTION: DO NOT add bleach or acidic solutions directly to the sample-preparation waste.

Buffers N3 and PB contain guanidine hydrochloride, which can form highly reactive compounds when combined with bleach.

If liquid containing these buffers is spilt, clean with suitable laboratory detergent and water. If the spilt liquid contains potentially infectious agents, clean the affected area first with laboratory detergent and water, and then with 1% (v/v) sodium hypochlorite.

The following risk and safety phrases apply to QIAprep Miniprep Kits.

Buffer N3

Contains guanidine hydrochloride, acetic acid: harmful, irritant. Risk and safety phrases:* R22-36/38, S13-23-26-36/37/39-46.

Buffer P2

Contains sodium hydroxide: irritant. Risk and safety phrases:* R36/38, S13-26-36-46.

Buffer PB

Contains guanidine hydrochloride, isopropanol: harmful, flammable, irritant. Risk and safety phrases:* R10-22-36/38, S13-23-26-36/37/39-46

RNase A

Contains ribonuclease: sensitizer. Risk and safety phrases:* R42/43, S23-24-26-36/37.

24-hour emergency information

Emergency medical information in English, French, and German can be obtained 24 hours a day from:

Poison Information Center Mainz, Germany

Tel: +49-6131-19240

* R10: Flammable; R22: Harmful if swallowed; R36/38: Irritating to eyes and skin; R42/43: May cause sensitization by inhalation and skin contact; S13: Keep away from food, drink, and animal feedingstuffs; S23; Do not breathe spray; S24: Avoid contact with skin; S26: In case of contact with eyes, rinse immediately with plenty of water and seek medical advice; S36: Wear suitable protective clothing; S36/37: Wear suitable protecting clothing and gloves; S36/37/39: Wear suitable protective clothing, gloves and eye/face protection; S46: If swallowed seek medical advice immediately and show the container or label.

Introduction

The QIAprep Miniprep system provides a fast, simple, and cost-effective plasmid miniprep method for routine molecular biology laboratory applications. QIAprep Miniprep Kits use silica membrane technology to eliminate the cumbersome steps associated with loose resins or slurries. Plasmid DNA purified with QIAprep Miniprep Kits is immediately ready for use. Phenol extraction and ethanol precipitation are not required, and high-quality plasmid DNA is eluted in a small volume of Tris buffer (included in each kit) or water. The QIAprep system consists of four products with different handling options to suit every throughput need.

Low throughput

The **QIAprep Spin Miniprep Kit** is designed for quick and convenient processing of 1–24 samples simultaneously in less than 30 minutes. QIAprep spin columns can be used in a microcentrifuge or on any vacuum manifold with luer connectors (e.g., QIAvac 24 Plus, or QIAvac 6S with QIAvac Luer Adapters).

Medium throughput

For medium throughput requirements the **QIAprep 8 Miniprep Kit and QIAprep 8 Turbo Miniprep Kit** utilize 8-well strips on QIAvac 6S allowing up to 48 minipreps to be performed simultaneously in approximately 40 and 30 minutes respectively. In addition, the **QIAprep 8 Turbo BioRobot® Kit** enables automated purification of up to 48 minipreps in 50 minutes on BioRobot systems.

High throughput

The **QIAprep 96 Turbo Miniprep Kit** enables up to 96 minipreps to be performed simultaneously in less than 45 minutes on the QIAvac 96. For automated high-throughput plasmid purification the **QIAprep 96 Turbo BioRobot Kit** enables up to 96 minipreps to be processed in 70 minutes.

Applications using QIAprep purified DNA

Plasmid DNA prepared using the QIAprep system is suitable for a variety of routine applications including:

- Restriction enzyme digestion
- Library screening
- In vitro translation
- Sequencing
- Ligation and transformation
- Transfection of robust cells

Principle

The QIAprep miniprep procedure is based on alkaline lysis of bacterial cells followed by adsorption of DNA onto silica in the presence of high salt (1). The unique silica membrane used in QIAprep Miniprep Kits completely replaces glass or silica slurries for plasmid minipreps.

The procedure consists of three basic steps:

- Preparation and clearing of a bacterial lysate
- Adsorption of DNA onto the QIAprep membrane
- Washing and elution of plasmid DNA

All steps are performed without the use of phenol, chloroform, CsCl, ethidium bromide, and without alcohol precipitation.

Preparation and clearing of bacterial lysate

The QIAprep miniprep procedure uses the modified alkaline lysis method of Birnboim and Doly (2). Bacteria are lysed under alkaline conditions, and the lysate is subsequently neutralized and adjusted to high-salt binding conditions in one step. After lysate clearing, the sample is ready for purification on the QIAprep silica membrane. For more details on growth of bacterial cultures and alkaline lysis, please refer to Appendix A on pages 39–42. In the QIAprep Spin and QIAprep 8 miniprep procedures, lysates are cleared by centrifugation, while the QIAprep 8 and 96 Turbo Miniprep kits provide TurboFilter strips or plates for lysate clearing by filtration.

LyseBlue reagent*

Use of LyseBlue is optional and is not required to successfully perform plasmid preparations. See “Using LyseBlue reagent” on page 14 for more information.

* LyseBlue reagent is only supplied with QIAprep Spin Miniprep Kits since multiwell or automated formats do not allow visual control of individual samples.

LyseBlue is a color indicator which provides visual identification of optimum buffer mixing. This prevents common handling errors that lead to inefficient cell lysis and incomplete precipitation of SDS, genomic DNA, and cell debris. This makes LyseBlue ideal for use by researchers who have not had much experience with plasmid preparations as well as experienced scientists who want to be assured of maximum product yield.

DNA adsorption to the QIAprep membrane

QIAprep columns, strips, and plates use a silica membrane for selective adsorption of plasmid DNA in high-salt buffer and elution in low-salt buffer. The optimized buffers in the lysis procedure, combined with the unique silica membrane, ensure that only DNA will be adsorbed, while RNA, cellular proteins, and metabolites are not retained on the membrane but are found in the flow-through.

Washing and elution of plasmid DNA

Endonucleases are efficiently removed by a brief wash step with Buffer PB. This step is essential when working with *endA*$^+$ strains such as the JM series, HB101 and its derivatives, or any wild-type strain, to ensure that plasmid DNA is not degraded. The Buffer PB wash step is also necessary when purifying low-copy plasmids, where large culture volumes are used.

Salts are efficiently removed by a brief wash step with Buffer PE. High-quality plasmid DNA is then eluted from the QIAprep column with 50–100 µl of Buffer EB or water. The purified DNA is ready for immediate use in a range of applications — no need to precipitate, concentrate, or desalt.

Note: Elution efficiency is dependent on pH. The maximum elution efficiency is achieved between pH 7.0 and 8.5. When using water for elution, make sure that the pH value is within this range. Store DNA at –20°C when eluted with water since DNA may degrade in the absence of a buffering agent.

DNA yield

Plasmid yield with the QIAprep miniprep system varies depending on plasmid copy number per cell (see page 39), the individual insert in a plasmid, factors that affect growth of the bacterial culture (see pages 39–42), the elution volume (Figure 1), and the elution incubation time (Figure 2). A 1.5 ml overnight culture can yield from 5 to 15 µg of plasmid DNA (Table 1, page 14). To obtain the optimum combination of DNA quality, yield, and concentration, we recommend using Luria-Bertani (LB) medium for growth of cultures (for composition see page 41), eluting plasmid DNA in a volume of 50 µl, and performing a short incubation after addition of the elution buffer.

Elution Volume versus DNA Concentration and Recovery

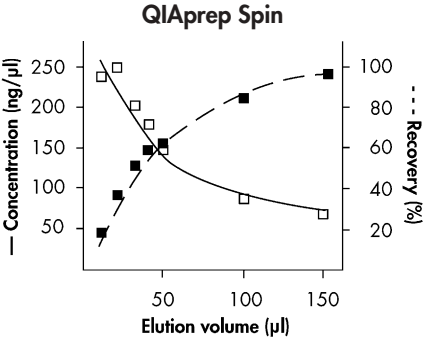

Figure 1 10 µg pUC18 DNA was purified using the QIAprep Spin protocol and eluted with the indicated volumes of Buffer EB. The standard protocol uses 50 µl Buffer EB for elution, since this combines high yield with high concentration. However the yield can be increased by increasing the elution volume.

Incubation Time versus DNA Recovery

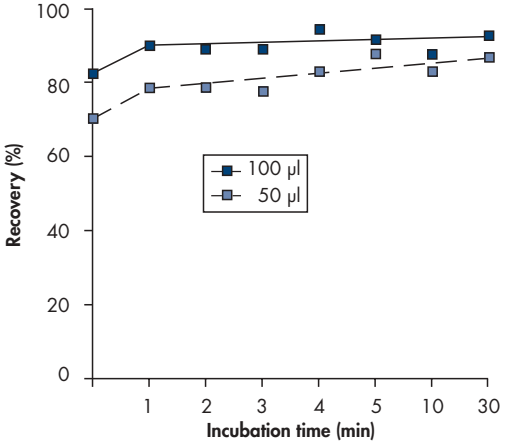

Figure 2 10 µg pBluescript DNA was purified using the QIAprep Spin Miniprep protocol and eluted after the indicated incubation times with either 50 µl or 100 µl Buffer EB. The graph shows that an incubation time of 1 minute and doubling the elution buffer volume increases yield.

Table 1. Effect of Different Compositions of Growth Medium LB on DNA Yield

Culture media	Yield
LB (containing 10 g/liter NaCl)	11.5 µg
LB (containing 5 g/liter NaCl)	9.5 µg

QIAprep Spin Miniprep Kit was used to purify DNA from 1.5 ml LB overnight cultures of XL1-Blue containing pBluescript®. Elution was performed according to the standard protocol (50 µl Buffer EB and 1 min incubation). Use of the recommended LB composition (with 10 g/liter NaCl, also see Appendix A, p. 43) provides optimal plasmid yield.

Using LyseBlue reagent

Using a simple visual identification system, LyseBlue reagent prevents common handling errors that lead to inefficient cell lysis and incomplete precipitation of SDS, cell debris, and genomic DNA.

LyseBlue can be added to the resuspension buffer (Buffer P1) bottle before use. Alternatively, smaller amounts of LyseBlue can be added to aliquots of Buffer P1, enabling single plasmid preparations incorporating visual lysis control to be performed.

LyseBlue reagent should be added to Buffer P1 at a ratio of 1:1000 to achieve the required working concentration (e.g., 10 µl LyseBlue into 10 ml Buffer P1). Make sufficient LyseBlue/Buffer P1 working solution for the number of plasmid preps being performed.

LyseBlue precipitates after addition into Buffer P1. This precipitate will completely dissolve after addition of Buffer P2. Shake Buffer P1 before use to resuspend LyseBlue particles.

The plasmid preparation procedure is performed as usual. After addition of Buffer P2 to Buffer P1, the color of the suspension changes to blue. Mixing should result in a homogeneously colored suspension. If the suspension contains localized regions of colorless solution or if brownish cell clumps are still visible, continue mixing the solution until a homogeneously colored suspension is achieved.

Upon addition of neutralization buffer (Buffer N3), LyseBlue turns colorless. The presence of a homogeneous solution with no traces of blue indicates that SDS from the lysis buffer has been effectively precipitated.

Important Notes

Please read the following notes before starting any of the QIAprep procedures.

Growth of bacterial cultures in tubes or flasks

1. **Pick a single colony from a freshly streaked selective plate and inoculate a culture of 1–5 ml LB medium containing the appropriate selective antibiotic. Incubate for 12–16 h at 37°C with vigorous shaking.**

   Growth for more than 16 h is not recommended since cells begin to lyse and plasmid yields may be reduced. Use a tube or flask with a volume of at least 4 times the volume of the culture.

2. **Harvest the bacterial cells by centrifugation at > 8000 rpm (6800 x *g*) in a conventional, table-top microcentrifuge for 3 min at room temperature (15–25°C).**

   The bacterial cells can also be harvested in 15 ml centrifuge tubes at 5400 x *g* for 10 min at 4°C. Remove all traces of supernatant by inverting the open centrifuge tube until all medium has been drained.

Cell Cultivation in a 96-Well Block for QIAprep Turbo 96

1. **Fill each well of a 96-well flat-bottom block with 1.3 ml of growth medium containing the appropriate selective agent. Inoculate each well from a single bacterial colony. Incubate the cultures for 20–24 h at 37°C with vigorous shaking.**

   The wells in the block may be protected against spill-over by covering the block with a plastic lid or adhesive tape. AirPore microporous tape sheets promote gas exchange during culturing (see ordering information, page 49). If non-porous tape is used, pierce 2–3 holes in the tape with a needle above each well for aeration.

2. **Harvest the bacterial cells in the block by centrifugation for 5 min at 2100 x *g* in a centrifuge with a rotor for microtiter plates (e.g., QIAGEN Centrifuge 4K15C, or Heraeus Minifuge® GL), preferably at 4–10°C. The block should be covered with adhesive tape during centrifugation. Remove media by inverting the block.**

   To remove the media, peel off the tape and quickly invert the block over a waste container. Tap the inverted block firmly on a paper towel to remove any remaining droplets of medium.

   WARNING: Ensure that the buckets on the rotor have sufficient clearance to accommodate the 2 ml flat-bottom blocks before starting the centrifuge.

Buffer notes

- Add the provided RNase A solution to Buffer P1, mix, and store at 2–8°C.
- Add ethanol (96–100%) to Buffer PE before use (see bottle label for volume).
- Check Buffers P2 and N3 before use for salt precipitation. Redissolve any precipitate by warming to 37°C. Do not shake Buffer P2 vigorously.
- Close the bottle containing Buffer P2 immediately after use to avoid acidification of Buffer P2 from CO_2 in the air.
- Buffers P2, N3, and PB contain irritants. Wear gloves when handling these buffers.
- Optional: Add the provided LyseBlue reagent to Buffer P1 and mix before use. Use one vial LyseBlue (spin down briefly before use) per bottle of Buffer P1 to achieve a 1:1000 dilution. LyseBlue provides visual identification of optimum buffer mixing thereby preventing the common handling errors that lead to inefficient cell lysis and incomplete precipitation of SDS, genomic DNA, and cell debris. For more details see "Using LyseBlue reagent" on page 14.

Centrifugation notes

- All centrifugation steps are carried out at 13,000 rpm (~17,900 x *g*) in a conventional, table-top microcentrifuge.

Vacuum notes

- Switch off vacuum between steps to ensure that a consistent, even vacuum is applied during manipulations.
- Wear safety glasses when working near a manifold under pressure.
- For safety reasons, do not use 96-well plates that have been damaged in any way.
- For QIAprep 8, QIAprep 8 Turbo, and QIAprep 96 Turbo miniprep procedures, the negative pressure (vacuum) should be regulated before beginning the procedure by applying the vacuum to the appropriate number of **empty** QIAprep modules (indicated in Table 2) on the QIAvac manifold.

  The vacuum pressure is the pressure differential between the inside of the manifold and the atmosphere (standard atmospheric pressure: 1013 millibar or 760 mm Hg) and can be measured using a vacuum regulator (see ordering information, page 48). Vacuum recommendations are given in negative units (Table 2) to indicate the required reduction in pressure with respect to the atmosphere. Table 3 provides pressure conversions to other units.
- Use of a vacuum pressure lower than recommended may reduce DNA yield and purity.

Table 2. Regulation of Vacuum Pressures for QIAprep Multiwell Procedures

Procedure	Vacuum manifold	Module used for checking pressure*	Vacuum pressure‡ mbar	mm Hg
QIAprep 8	QIAvac 6S	QIAprep 8 strip(s)†	–100 to –530	–75 to –400
QIAprep 8 Turbo	QIAvac 6S	QIAprep 8 strip(s)†	–100 to –530	–75 to –400
QIAprep 96 Turbo	QIAvac 96	QIAprep 96 plate	–40 to –200	–30 to –150

* Pressure should be regulated using empty modules on the manifold.

† Regulate the vacuum using the number of 8-well strips that will be used in the purification.

‡ Values apply to empty modules on QIAvac. During the working procedure the vacuum may exceed the values indicated.

Table 3. Pressure Conversions

To convert from millibars (mbar) to	Multiply by:
Millimeters of mercury (mm Hg)	0.75
Kilopascals (kPa)	0.1
Inches of mercury (inch Hg)	0.0295
Torrs (Torr)	0.75
Atmospheres (atm)	0.000987
Pounds per square inch (psi)	0.0145

Elution notes

- Ensure that the elution buffer is dispensed directly onto the center of the QIAprep membrane for optimal elution of DNA. Average eluate volume is 48 µl from an elution-buffer volume of 50 µl (QIAprep spin procedures), and 60 µl from an elution-buffer volume of 100 µl (QIAprep multiwell procedures).
- For increased DNA yield, use a higher elution-buffer volume. For increased DNA concentration, use a lower elution-buffer volume (see "DNA yield", pages 13–14).
- If water is used for elution, make sure that its pH is between 7.0 and 8.5. Elution efficiency is dependent on pH and the maximum elution efficiency is achieved within this range. A pH <7.0 can decrease yield.

  Note: Store DNA at –20°C when eluted with water, as DNA may degrade in the absence of a buffering agent.
- DNA can also be eluted in TE buffer (10 mM Tris·Cl, 1 mM EDTA, pH 8.0), but the EDTA may inhibit subsequent enzymatic reactions.

Multichannel pipet recommendations

Many steps of the QIAprep 8 procedure and the QIAprep 8 and 96 Turbo procedures require repeated pipetting, and a reservoir or multichannel pipet can greatly facilitate liquid handling. The Matrix Impact® cordless multichannel pipet can be purchased with an optional expandable tip-spacing system for direct liquid transfer from tubes to microtiter plates.

These can be purchased from Matrix Technologies Corporation: www.matrixtechcorp.com .

Pipet tip recommendations

Some standard 1 ml pipet tips are not easily accommodated in the flat-bottom blocks that are used in the QIAprep 96 Turbo Miniprep protocol. When pipetting into flat-bottom blocks, we recommend using pipet tips with 1.25 ml or 1.5 ml fill volume, such as:

- Matrix pipet tips (cat. no. 8051) for use with the Matrix pipet mentioned above. These can be purchased from the supplier listed above.
- Finntip® Multistepper® pipet tips for use with single-channel pipets. These are available from Thermo Electron Corporation: www.thermo.com .

Guidelines for QIAvac manifolds

QIAvac 24 Plus, QIAvac 6S, and QIAvac 96 facilitate DNA minipreps by providing a convenient modular vacuum manifold for use with the QIAprep system. The following recommendations should be followed when handling QIAvac manifolds.

- QIAvac manifolds operate with a house vacuum or Vacuum Pump (e.g., Vacuum Pump, cat. no. 84010 [USA and Canada], 84000 [Japan], or 84020 [rest of world]).
- Always store QIAvac manifolds clean and dry. To clean, simply rinse all components with water and dry with paper towels. Do not air dry, as the screws may rust and need to be replaced. Do not use abrasives or solvents.
- Always place the QIAvac manifold on a secure bench top or work area. If dropped, the manifold may crack.
- The components of QIAvac manifolds are not resistant to ethanol, methanol, or other organic solvents (Table 4). Do not bring solvents into contact with the vacuum manifold. If solvents are spilled on the unit, rinse thoroughly with distilled water. Ensure that no residual Buffer PE remains in the vacuum manifold.

- To ensure consistent performance, do not apply silicone or vacuum grease to any part of a QIAvac manifold. The spring lock on the top plate and the self-sealing gasket (QIAvac 6S and QIAvac 96) provide an airtight seal when vacuum is applied to the assembled unit. To maximize gasket lifetime, rinse the gasket free of salts and buffers after each use and dry with paper towels before storage.

Table 4. Chemical-Resistance Properties of QIAvac Manifolds

Resistant to:	Not resistant to:	
Chlorine bleach (12%)	Acetic acid*	Benzene
Hydrochloric acid	Acetone	Chloroform
Sodium chloride	Chromic acid*	Ethers
Sodium hydroxide	Phenol	Toluene
Urea	Concentrated alcohols*	

* QIAvac 24 Plus is resistant to these chemicals.

QIAvac vacuum manifolds

QIAvac 24 Plus Manifold

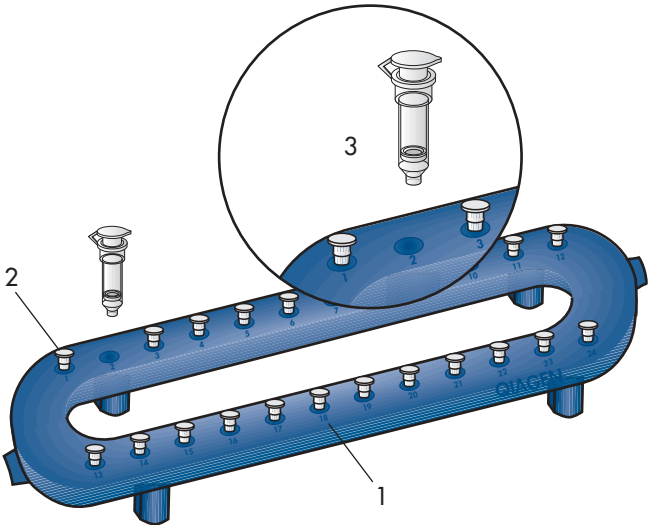

Figure 3 Components of the QIAvac 24 Plus manifold.

1. QIAvac 24 Plus vacuum manifold
2. Luer slot closed with luer plug
3. Spin column

QIAvac 6S Manifold

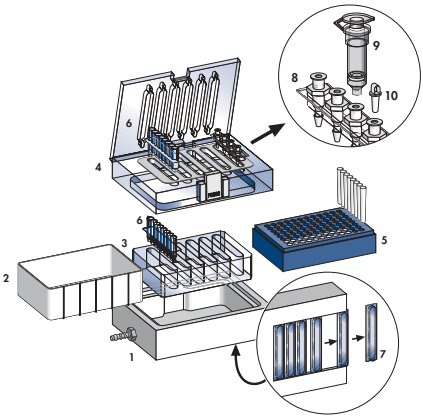

Figure 4 Components of the QIAvac 6S manifold.

1. QIAvac base, which holds a waste tray, a strip holder, or a microtube rack
2. Waste tray
3. QIAvac strip holder to hold 8-well strips
4. QIAvac top plate with slots for 8-well strips or QIAvac Luer Adapters
5. Microtube rack
6. 8-well strip*
7. Blanks to seal unused slots
8. QIAvac Luer Adapter†
9. QIAprep spin column*
10. Plug to seal unused luer connectors†

QIAvac 96 Manifold

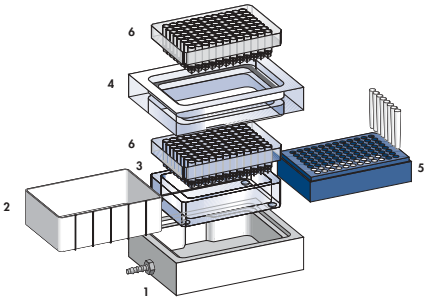

Figure 5 Components of the QIAvac 96 manifold.

1. QIAvac base, which holds a waste tray, a plate holder, or a microtube rack
2. Waste tray
3. Plate holder (shown with 96-well plate)
4. QIAvac 96 top plate with aperture for 96-well plate
5. Microtube rack
6. 96-well plate‡

* Not included with QIAvac 6S. Included in appropriate kits. † Not included with QIAvac 6S. Must be purchased separately. ‡ Not included with QIAvac 96. Included in QIAprep 96 Turbo Miniprep Kits.

QIAprep Spin Procedure

in microcentrifuges	on vacuum manifolds

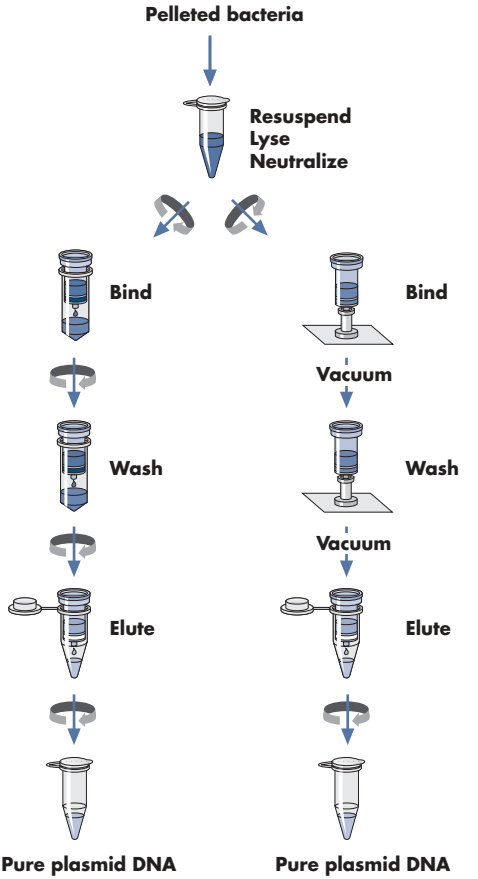

Protocol: Plasmid DNA Purification Using the QIAprep Spin Miniprep Kit and a Microcentrifuge

This protocol is designed for purification of up to 20 µg of high-copy plasmid DNA from 1–5 ml overnight cultures of *E. coli* in LB (Luria-Bertani) medium. For purification of low-copy plasmids and cosmids, large plasmids (>10 kb), and DNA prepared using other methods, refer to the recommendations on page 44.

Please read "Important Notes" on pages 15–21 before starting.

Note: All protocol steps should be carried out at room temperature.

Procedure

1. **Resuspend pelleted bacterial cells in 250 µl Buffer P1 and transfer to a microcentrifuge tube.**

   Ensure that RNase A has been added to Buffer P1. No cell clumps should be visible after resuspension of the pellet.

   If LyseBlue reagent has been added to Buffer P1, vigorously shake the buffer bottle to ensure LyseBlue particles are completely dissolved. The bacteria should be resuspended completely by vortexing or pipetting up and down until no cell clumps remain.

2. **Add 250 µl Buffer P2 and mix thoroughly by inverting the tube 4–6 times.**

   Mix gently by inverting the tube. Do not vortex, as this will result in shearing of genomic DNA. If necessary, continue inverting the tube until the solution becomes viscous and slightly clear. Do not allow the lysis reaction to proceed for more than 5 min.

   If LyseBlue has been added to Buffer P1 the cell suspension will turn blue after addition of Buffer P2. Mixing should result in a homogeneously colored suspension. If the suspension contains localized colorless regions or if brownish cell clumps are still visible, continue mixing the solution until a homogeneously colored suspension is achieved.

3. **Add 350 µl Buffer N3 and mix immediately and thoroughly by inverting the tube 4–6 times.**

   To avoid localized precipitation, mix the solution thoroughly, immediately after addition of Buffer N3. Large culture volumes (e.g. ≥5 ml) may require inverting up to 10 times. The solution should become cloudy.

   If LyseBlue reagent has been used, the suspension should be mixed until all trace of blue has gone and the suspension is colorless. A homogeneous colorless suspension indicates that the SDS has been effectively precipitated.

4. **Centrifuge for 10 min at 13,000 rpm (~17,900 x *g*) in a table-top microcentrifuge.**

   A compact white pellet will form.

5. **Apply the supernatants from step 4 to the QIAprep spin column by decanting or pipetting.**
6. **Centrifuge for 30–60 s. Discard the flow-through.**
7. **Recommended: Wash the QIAprep spin column by adding 0.5 ml Buffer PB and centrifuging for 30–60 s. Discard the flow-through.**

   This step is necessary to remove trace nuclease activity when using *endA*+ strains such as the JM series, HB101 and its derivatives, or any wild-type strain, which have high levels of nuclease activity or high carbohydrate content. Host strains such as XL-1 Blue and DH5α™ do not require this additional wash step.
8. **Wash QIAprep spin column by adding 0.75 ml Buffer PE and centrifuging for 30–60 s.**
9. **Discard the flow-through, and centrifuge for an additional 1 min to remove residual wash buffer.**

   Important: Residual wash buffer will not be completely removed unless the flow-through is discarded before this additional centrifugation. Residual ethanol from Buffer PE may inhibit subsequent enzymatic reactions.
10. **Place the QIAprep column in a clean 1.5 ml microcentrifuge tube. To elute DNA, add 50 µl Buffer EB (10 mM Tris·Cl, pH 8.5) or water to the center of each QIAprep spin column, let stand for 1 min, and centrifuge for 1 min.**

Protocol: Plasmid DNA Purification Using the QIAprep Spin Miniprep Kit and 5 ml Collection Tubes

The QIAprep Spin Miniprep procedure can be performed using 5 ml centrifuge tubes (e.g., Greiner, cat. no. 115101 or 115261) as collection tubes to decrease handling. The standard protocol on pages 22–23 should be followed with the following modifications:

Step 4: Place a QIAprep spin column in a 5 ml centrifuge tube instead of a 2 ml collection tube.

Step 6: Centrifuge at 3000 x *g* for 1 min using a suitable rotor (e.g., Beckman® GS-6KR centrifuge at ~4000 rpm). (The flow-through does not need to be discarded.)

Steps 7 and 8: For washing steps, centrifugation should be performed at 3000 x *g* for 1 min. (The flow-through does not need to be discarded.)

Step 9: Transfer the QIAprep spin column to a microcentrifuge tube. Centrifuge at maximum speed for 1 min. Continue with step 10 of the protocol.

Protocol: Plasmid DNA Purification Using the QIAprep Spin Miniprep Kit and a Vacuum Manifold

This protocol is designed for purification of up to 20 µg high-copy plasmid DNA from 1–5 ml overnight cultures of *E. coli* grown in LB (Luria-Bertani) medium, using QIAprep spin columns on QIAvac 24 Plus, QIAvac 6S, or other vacuum manifolds with luer connectors. For purification of low-copy plasmids and cosmids, large plasmids (>10 kb), and DNA prepared using other methods, refer to the recommendations on page 44.

Please read "Important Notes" on pages 15–21 before starting.

Note: All protocol steps should be carried out at room temperature.

Procedure

1. **Resuspend pelleted bacterial cells in 250 µl Buffer P1 and transfer to a microcentrifuge tube.**

   Ensure that RNase A has been added to Buffer P1. No cell clumps should be visible after resuspension of the pellet.

   If LyseBlue reagent has been added to Buffer P1, vigorously shake the buffer bottle to ensure LyseBlue particles are completely dissolved. The bacteria should be resuspended completely by vortexing or pipetting up and down until no cell clumps remain.

2. **Add 250 µl Buffer P2 and mix thoroughly by inverting the tube gently 4–6 times.**

   Do not vortex, as this will result in shearing of genomic DNA. If necessary, continue inverting the tube until the solution becomes viscous and slightly clear. Do not allow the lysis reaction to proceed for more than 5 min.

   If LyseBlue has been added to Buffer P1 the cell suspension will turn blue after addition of Buffer P2. Mixing should result in a homogeneously colored suspension. If the suspension contains localized colorless regions or if brownish cell clumps are still visible, continue mixing the solution until a homogeneously colored suspension is achieved.

3. **Add 350 µl Buffer N3 and mix immediately and thoroughly by inverting the tube 4–6 times.**

   To avoid localized precipitation, immediately after addition of Buffer N3 mix the solution gently but thoroughly. Large culture volumes (e.g. ≥5 ml) may require inverting up to 10 times. The solution should become cloudy.

   If LyseBlue reagent has been used, the suspension should be mixed until all trace of blue has gone and the suspension is colorless. A homogeneous colorless suspension indicates that the SDS has been effectively precipitated.

4. **Centrifuge for 10 min at 13,000 rpm (~17,900 x *g*) in a table-top microcentrifuge.**

   A compact white pellet will form.

During centrifugation, prepare the vacuum manifold and QIAprep spin columns:

QIAvac 24 Plus (see pages 16 and 18–19):

- Ensure that the vacuum source is connected to the upper threaded hole of the QIAvac 24 Plus and the lower threaded hole is tightly sealed using the screw cap.
- If using the QIAvac Connecting System, connect the system to the manifold and vacuum soured as described in the *QIAvac 24 Plus Handbook*.
- Insert up to 24 spin columns into the luer slots of the QIAvac 24 Plus. Close unused luer slots with luer plugs.

QIAvac 6S manifold:

(**Note**: The following procedure applies to the manifold with a hinged lid and spring lock. See pages 16 and 18–20.)

- Open QIAvac 6S lid. Place QIAvac luer adapter(s), or blanks (provided with QIAvac 6S) to seal unused slots, into the slots of the QIAvac top plate. Close the QIAvac 6S lid. Place the waste tray inside the QIAvac base, and place the top plate squarely over the base. Attach the QIAvac 6S to a vacuum source.
- Insert each QIAprep spin column into a luer connector on the luer adapter(s) in the vacuum manifold. Seal unused luer connectors with plugs provided with the QIAvac Luer Adapter Set.

Other vacuum manifolds: Follow the supplier's instructions. Insert each QIAprep column into a luer connector.

5. **Apply the supernatant from step 4 to the QIAprep spin column by decanting or pipetting.**
6. **Switch on vacuum source to draw the solution through the QIAprep spin columns, and then switch off vacuum source.**
7. **Recommended: Wash the QIAprep spin column by adding 0.5 ml Buffer PB. Switch on vacuum source. After the solution has moved through the column, switch off vacuum source.**

   This step is necessary to remove trace nuclease activity when using *endA*$^+$ strains such as the JM series, HB101 and its derivatives, or any wild-type strain, which have high levels of nuclease activity or high carbohydrate content. Host strains such as XL-1 Blue and DH5α do not require this additional wash step.
8. **Wash the QIAprep spin column by adding 0.75 ml Buffer PE. Switch on vacuum source to draw the wash solution through the column, and then switch off vacuum source.**

9. **Transfer the QIAprep spin columns to a microcentrifuge tube. Centrifuge for 1 min.**

   Important: This extra spin is necessary to remove residual Buffer PE. Residual ethanol from Buffer PE may inhibit subsequent enzymatic reactions.

10. **Place the QIAprep column in a clean 1.5 ml microcentrifuge tube. To elute DNA, add 50 µl Buffer EB (10 mM Tris·Cl, pH 8.5) or water to the center of the QIAprep spin column, let stand for 1 min, and centrifuge for 1 min.**

QIAprep 8 Procedure

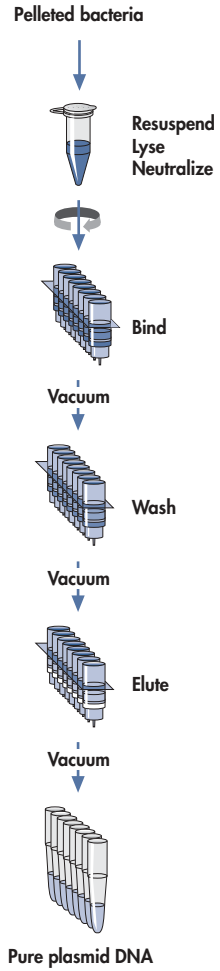

Protocol: Plasmid DNA Purification Using the QIAprep 8 Miniprep Kit

This protocol is designed for purification of high-copy plasmid DNA from up to 48 samples in parallel. Up to 20 µg DNA can be purified from 1–5 ml cultures of *E. coli* grown in LB (Luria-Bertani) medium. For purification of low-copy plasmids and cosmids, large plasmids (>10 kb), and DNA prepared using other methods, refer to the recommendations on page 44.

Please read "Important Notes for QIAprep Procedures" on pages 15–21 before starting.

Note: All protocol steps should be carried out at room temperature.

Procedure

1. **Resuspend pelleted bacterial cells in 250 µl Buffer P1 and transfer to a microcentrifuge tube.**

   Ensure that RNase A has been added to Buffer P1. No cell clumps should be visible after resuspension of the pellet.

2. **Add 250 µl Buffer P2 and mix thoroughly by gently inverting the tube 4–6 times.**

   Mix gently by inverting the tube. Do not vortex, as this will result in shearing of genomic DNA. If necessary, continue inverting the tube until the solution becomes viscous and slightly clear. Do not allow lysis reaction to proceed for more than 5 min.

3. **Add 350 µl Buffer N3 and mix immediately and thoroughly by inverting the tube 4–6 times.**

   To avoid localized precipitation, mix the solution gently but thoroughly, immediately after addition of Buffer N3. The solution should become cloudy.

4. **Centrifuge for 10 min at 13,000 rpm (~17,900 x *g*) in a table-top microcentrifuge.**

   A compact white pellet will form.

   During centrifugation, prepare QIAvac 6S:

   (**Note**: The following procedure applies to the manifold with a hinged lid and spring lock. See pages 16 and 18–20).

   - Open the QIAvac 6S lid and place QIAprep 8 strips in the slots of the QIAvac top plate, making sure the strips are positioned tightly. Seal any unused slots with blanks provided with the QIAvac 6S, and close the QIAvac 6S lid.
   - Place the waste tray inside the QIAvac base. Place the top plate squarely over the base. Seal any unused wells of the QIAprep strips with strip caps provided. Attach the QIAvac 6S to a vacuum source.

5. **Apply the supernatants from step 4 to the wells of the QIAprep 8 strips and switch on vacuum source.**

Make sure the QIAvac 6S is assembled correctly before loading. Load the supernatants promptly onto the QIAprep 8 strips. If the supernatants become cloudy, centrifuge again immediately before loading to prevent clogging the QIAprep 8 strips. The flow-through is collected in the waste tray.

6. **Recommended: Switch off vacuum and wash QIAprep 8 strips by adding 1 ml Buffer PB to each well and applying vacuum.**

   This step is recommended to remove trace nuclease activity when using *endA*$^+$ strains such as the JM series, HB101 and its derivatives, or any wild-type strain, which have high levels of nuclease activity or high carbohydrate content. Host strains such as XL-1 Blue and DH5α do not require this additional step.

7. **Switch off vacuum. Wash QIAprep 8 strips by adding 1 ml Buffer PE to each well and applying vacuum.**

   Allow Buffer PE to flow through the QIAprep 8 strips.

8. **Repeat step 7.**

9. **After Buffer PE has been drawn through all wells, apply maximum vacuum for an additional 5 min to dry the membrane.**

   Important: This step removes residual Buffer PE from the membrane. The removal is only effective when maximum vacuum is used (i.e., turn off vacuum regulator or leakage valves if they are used), allowing maximum airflow to go through the wells.

10. **Switch off the vacuum source and ventilate the QIAvac manifold. Lift the top plate from the base (not the QIAprep strips from the top plate), vigorously tap the top plate on a stack of absorbent paper until no drops come out, and blot the nozzles of the QIAprep strips with clean absorbent paper. Proceed to step 11a or 11b.**

    This step removes residual Buffer PE, which may be present around the outlet nozzles and collars of the QIAprep 8 strips. Residual ethanol from Buffer PE may inhibit subsequent enzymatic reactions.

11a. **For elution into collection microtubes provided:**

     Replace waste tray with the blue collection microtube rack (provided with the QIAvac 6S) containing 1.2 ml collection microtubes. Place the top plate back on the base.

     Rows of collection microtubes should be lined up with the QIAprep 8 strips.

11b. **For elution into a 96-well microplate:**

     Replace waste tray with empty blue collection microtube rack (provided with QIAvac 6S) and place a 96-well microplate directly on the rack. Place the top plate back on the base.

12. **Elute DNA by adding 100 µl Buffer EB (10 mM Tris·Cl, pH 8.5) or water to the center of each well of the QIAprep 8 Strips, let stand for 1 min, and switch on vacuum source. After elution, switch off vacuum source and ventilate the QIAvac 6S slowly.**

    For increased DNA concentration, an elution volume of 75 µl can be used.

QIAprep 8 and 96 Turbo Procedure

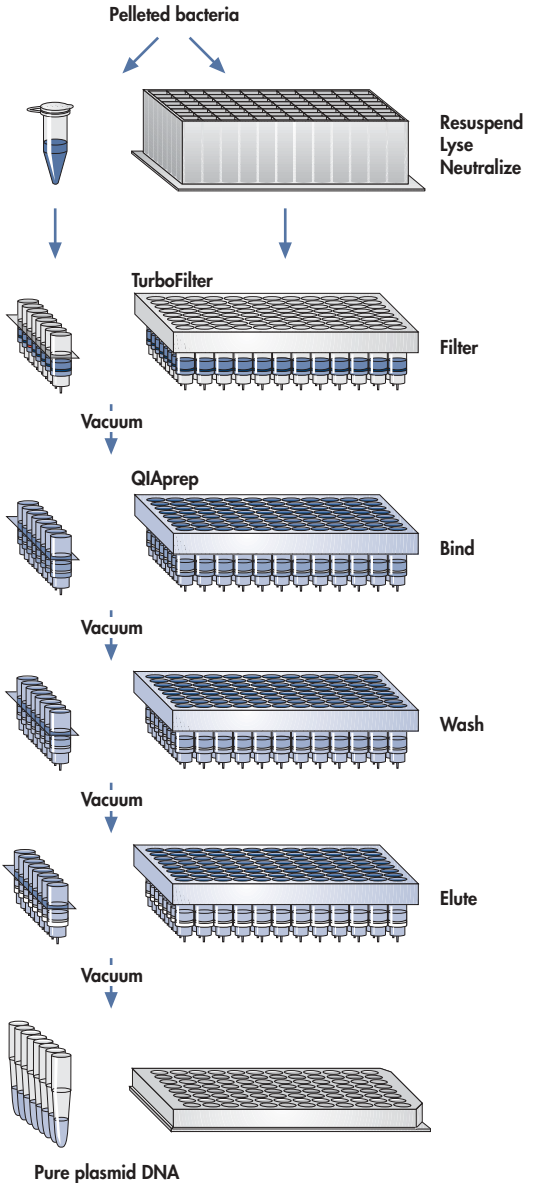

Protocol: Plasmid DNA Purification Using the QIAprep 8 Turbo Miniprep Kit

This protocol is designed for medium-throughput plasmid DNA minipreps using TurboFilter 8 and QIAprep 8 strips on QIAvac 6S. The kit accommodates 8–48 parallel preparations of up to 20 µg of high-copy plasmid DNA from 1–5 ml overnight cultures of *E. coli* grown in LB (Luria-Bertani) medium. For purification of low-copy plasmids and cosmids, large plasmids (>10 kb), and DNA prepared using other methods, refer to the recommendations on page 44. DNA purification can be automated, please call QIAGEN for more details.

Please read "Important Notes" on pages 15–21 before starting.

Note: All protocol steps should be carried out at room temperature.

Procedure

1. **Resuspend pelleted bacterial cells in 250 µl Buffer P1.**

   Ensure that RNase A has been added to Buffer P1. No cell clumps should be visible after resuspension of the pellet.

2. **Add 250 µl Buffer P2 to each sample, mix thoroughly by gently inverting the tubes 4–6 times, and incubate at room temperature for 5 min.**

   It is important to mix gently by inverting the tubes. Do not vortex, as this will result in shearing of genomic DNA. If necessary, continue inverting the tubes until the solution becomes viscous and slightly clear.

   During incubation prepare the QIAvac 6S (see pages 16 and 18–20):

   - Open QIAvac 6S lid and place TurboFilter 8 Strips in the slots of the QIAvac top plate. Make sure the strips are positioned tightly. Seal any unused slots with blanks (provided with QIAvac 6S), and close QIAvac 6S lid.
   - Place the strip holder inside the QIAvac base. Place QIAprep 8 strips into the strip holder such that a QIAprep strip is placed under each TurboFilter strip.
   - Place the top plate squarely over the base. Seal any unused wells of the TurboFilter strips with the strip caps provided. Attach the QIAvac to vacuum source.

3. **Add 350 µl Buffer N3 to each sample and mix immediately and thoroughly by inverting the tubes 4–6 times.**

   To avoid localized precipitation, mix the samples gently but thoroughly, immediately after addition of Buffer N3. The solutions should become cloudy.

4. **Pipet the lysates from step 3 (850 µl per well) into the wells of the TurboFilter strips. Unused wells of TurboFilter strips should be sealed with the strip caps provided. Apply vacuum until all samples have passed through TurboFilter.**

   Optimal flow rate is 1–2 drops/s, which can be regulated by using a 3-way valve or vacuum regulator (see page 48) between the QIAvac and the vacuum source.

5. **Switch off vacuum, and ventilate the QIAvac 6S slowly. Discard the TurboFilter strips. Transfer the QIAprep strips containing the cleared lysates into the slots of the QIAvac top plate. Close QIAvac 6S lid. Replace strip holder in the base with the waste tray. Place the top plate squarely over the base. Seal any unused wells of the QIAprep strips with the strip caps provided. Apply vacuum.**

   The flow-through is collected in the waste tray.

6. **Recommended: Switch off vacuum, and wash QIAprep strips by adding 1 ml Buffer PB to each well and applying vacuum.**

   This step is necessary to remove trace nuclease activity when using *endA*$^+$ strains such as the JM series, HB101 and its derivatives, or any wild-type strain, which have high levels of nuclease activity or high carbohydrate content. Host strains such as XL-1 Blue and DH5α do not require this additional step.

7. **Switch off vacuum. Wash QIAprep strips by adding 1 ml Buffer PE to each well and applying vacuum. Repeat once.**

8. **After Buffer PE has been drawn through all wells, apply maximum vacuum for an additional 5 min to dry the membrane.**

   Important: This step removes residual Buffer PE from the membrane. The removal is only effective when maximum vacuum is used (i.e., turn off vacuum regulator or leakage valves if they are used), allowing maximum airflow to go through the wells.

9. **Switch off vacuum, and ventilate the QIAvac 6S slowly. Lift the top plate from the base (not the QIAprep strips from the top plate), vigorously tap the top plate on a stack of absorbent paper until no drops come out, and blot the nozzles of the QIAprep strips with clean absorbent paper. Proceed either to step 10a or 10b, as desired.**

   This step removes residual Buffer PE, which may be present around the outlet nozzles and collars of QIAprep strips. Residual ethanol from Buffer PE may inhibit subsequent enzymatic reactions.

10a. **For elution into collection microtubes provided:**

   Replace waste tray with the blue collection microtube rack (provided with the QIAvac 6S) containing 1.2 ml collection microtubes. Place the top plate back on the base.

   Rows of collection microtubes should be lined up with the QIAprep 8 strips.

10b. **For elution into a 96-well microplate:**

   Replace waste tray with empty blue collection microtube rack (provided with the QIAvac 6S) and place a 96-well microplate directly on the rack. Place the top plate back on the base.

11. **To elute DNA, add 100 µl Buffer EB (10 mM Tris·Cl, pH 8.5) or water to the center of each well of the QIAprep strips, let stand 1 min, and apply maximum vacuum for 5 min. Switch off vacuum and ventilate the QIAvac 6S slowly.**

   For increased DNA concentration, an elution volume of 75 µl can be used.

Protocol: Plasmid DNA Purification Using the QIAprep 96 Turbo Miniprep Kit

This protocol is designed for high-throughput plasmid DNA minipreps using TurboFilter 96 and QIAprep 96 plates on QIAvac 96. The kit accommodates up to 96 parallel preparations of up to 20 µg of high-copy plasmid DNA from 1–5 ml overnight cultures of *E. coli* grown in LB (Luria-Bertani) medium. If 1.3 ml overnight cultures are used, up to 96 cultures can be grown in a flat-bottom block (see page 15 for protocol). For purification of low-copy plasmids and cosmids, large plasmids (>10 kb), and DNA prepared using other methods, refer to the recommendations on page 44. DNA purification can be automated, please call QIAGEN for more details.

Please read "Important Notes" on pages 15–21 before starting.

Note: All protocol steps should be carried out at room temperature.

Procedure

1. **Resuspend pelleted bacterial cells in 250 µl Buffer P1 and transfer to the flat-bottom block (if cells were not harvested in this block) provided with the kit.**

   Ensure that RNase A has been added to Buffer P1. No cell clumps should be visible after resuspension of the pellet.

2. **Add 250 µl Buffer P2 to each sample. Dry the top of the flat-bottom block with a paper towel, seal the block with the tape provided, gently invert the block 4–6 times to mix, and incubate at room temperature for 5 min.**

   It is important to mix gently by inverting the block. Do not shake vigorously, as this will result in shearing of genomic DNA. If necessary, continue inverting the block until the solution becomes viscous and slightly clear.

   During incubation prepare QIAvac 96 (see pages 16 and 18–20):

   - Place the TurboFilter 96 plate in the QIAvac top plate, make sure that the plate is seated securely. Seal unused wells of the TurboFilter with tape.
   - Place the plate holder inside the QIAvac base. Place QIAprep 96 plate into the plate holder.
   - Place QIAvac 96 top plate squarely over base. The QIAprep plate should now be positioned under the TurboFilter plate. Attach QIAvac to a vacuum source.

3. **Remove the tape from the block. Add 350 µl Buffer N3 to each sample, dry the top of the flat-bottom block with a paper towel, and seal the block with a new tape sheet. Gently invert the block 4–6 times.**

   To avoid localized precipitation, mix the samples gently but thoroughly, immediately after addition of Buffer N3. The solutions should become cloudy.

4. **Remove the tape from the block. Pipet the lysates from step 3 (850 µl per well) into the wells of the TurboFilter plate. Unused wells of the TurboFilter plate should be sealed with tape. Apply vacuum until all samples have passed through.**

   The optimal flow rate is approximately 1–2 drops/s, which can be regulated by using a 3-way valve or vacuum regulator (see page 48) between the QIAvac and the vacuum source.

5. **Switch off vacuum and ventilate the QIAvac 96 slowly. Discard the TurboFilter plate. Transfer the QIAprep plate containing the cleared lysates to the top plate of the manifold. Seal any unused wells of the QIAprep plate with tape. Replace plate holder in the base with waste tray. Place the top plate squarely over the base, making sure that the QIAprep plate is seated securely. Apply vacuum.**

   The flow-through is collected in the waste tray.

6. **Recommended: Switch off vacuum, and wash QIAprep plate by adding 0.9 ml Buffer PB to each well and applying vacuum.**

   This step is necessary to remove trace nuclease activity when using *endA*$^+$ strains such as the JM series, HB101 and its derivatives, or any wild-type strain, which have high levels of nuclease activity or high carbohydrate content. Host strains such as XL-1 Blue and DH5α do not require this additional step.

7. **Switch off vacuum. Wash QIAprep plate by adding 0.9 ml of Buffer PE to each well and applying vacuum. Repeat once.**

8. **After Buffer PE has been drawn through all wells, apply maximum vacuum for an additional 10 min to dry the membrane.**

   Important: This step removes residual Buffer PE from the membrane. The removal is only effective when maximum vacuum is used (i.e., turn off vacuum regulator or leakage valves if they are used), allowing maximum airflow to go through the wells.

9. **Switch off vacuum, and ventilate the QIAvac 96 slowly. Lift the top plate from the base (not the QIAprep plate from the top plate), vigorously tap the top plate on a stack of absorbent paper until no drops come out, and blot the nozzles of the QIAprep plate with clean absorbent paper. Proceed either to step 10a, or 10b, as desired.**

   This step removes residual Buffer PE, which may be present around the outlet nozzles and collars of QIAprep plate. Residual ethanol from Buffer PE may inhibit subsequent enzymatic reactions.

10a. For elution into provided collection microtubes:

Replace waste tray with the blue collection microtube rack containing 1.2 ml collection microtubes. Place the top plate back on the base, making sure that the QIAprep plate is seated securely.

10b. For elution into a 96-well microplate:

Replace waste tray with an empty blue collection microtube rack (provided with the QIAvac 96). Place a 96-well microplate directly on the rack. Place the top plate back on the base, making sure that the QIAprep plate is positioned securely.

11. To elute DNA, add 100 µl of Buffer EB (10 mM Tris·Cl, pH 8.5) or water to the center of each well of the QIAprep plate, let stand for 1 min, and apply maximum vacuum for 5 min. Switch off vacuum and ventilate QIAvac 96 slowly.

For increased DNA concentration, an elution volume of 75 µl can be used.

Troubleshooting Guide

This troubleshooting guide may be helpful in solving any problems that may arise. The scientists in QIAGEN Technical Services are always happy to answer any questions you may have about either the information and protocol(s) in this handbook or molecular biology applications (see back cover for contact information).

		Comments and suggestions
Low or no yield		
General		Low yields may be caused by a number of factors. To find the source of the problem, analyze fractions saved from each step in the procedure on an agarose gel (e.g., Figure 6, page 43). A small amount of the cleared lysate and the entire flow-through can be precipitated by adding 0.7 volumes isopropanol and centrifuging at maximum speed (13,000 rpm or ~17,000 x *g*) for 30 minutes. The entire wash flow-through can be precipitated by adding 0.1 volumes of 3 M sodium acetate, pH 5.0, and 0.7 volumes of isopropanol.
No DNA in the cleared lysate before loading		
a)	Plasmid did not propagate	Read "Growth of bacterial cultures" (pages 39–41) and check that the conditions for optimal growth were met.
b)	Lysate prepared incorrectly	Check storage conditions and age of buffers.
c)	Buffer P2 precipitated	Redissolve by warming to 37°C.
d)	Cell resuspension incomplete	Pelleted cells should be completely resuspended in Buffer P1. Do not add Buffer P2 until an even suspension is obtained.
DNA is found in the flow-through of cleared lysate		
a)	QIAprep membrane overloaded	If rich culture media, such as TB or 2x YT are used, culture volumes must be reduced. It may be necessary to adjust LB culture volume if the plasmid and host strain show extremely high copy number or growth rates. See "Culture media" on page 41.

b)	RNase A digestion omitted	Ensure that RNase A is added to Buffer P1 before use.
c)	RNase A digestion insufficient	Reduce culture volume if necessary. If Buffer P1 containing RNase A is more than 6 months old, add additional RNase A.

DNA is found in the wash flow-through

Ethanol omitted from wash buffer	Repeat procedure with correctly prepared wash buffer (Buffer PE).

Little or no DNA in eluate

a)	Elution buffer incorrect	DNA is eluted only in the presence of low-salt buffer (e.g., Buffer EB [10 mM Tris·Cl, pH 8.5] or water). Elution efficiency is dependent on pH. The maximum efficiency is achieved between pH 7.0 and 8.5. When using water for elution, make sure that the pH value is within this range.
b)	Elution buffer incorrectly dispensed onto membrane	Add elution buffer to the center of the QIAprep membrane to ensure that the buffer completely covers the surface of the membrane for maximum elution efficiency.

Low DNA quality

DNA does not perform well in downstream applications

a)	Eluate salt concentration too high	For the QIAprep spin column, modify the wash step by incubating the column for 5 minutes at room temperature after adding 0.75 ml of Buffer PE and then centrifuging. For QIAprep 8 preparations and QIAprep 8 and 96 Turbo preparations, ensure that two wash steps are carried out prior to elution.
b)	Nuclease contamination	When using *endA*$^+$ host strains such as HB101 and its derivatives, the JM series, or any wild-type strain, ensure that the wash step with Buffer PB is performed.
c)	Eluate contains residual ethanol	Ensure that step 9 in the QIAprep Spin Miniprep protocol and steps 9 and 10 in the QIAprep 8 Miniprep, QIAprep 8 Turbo Miniprep, or QIAprep 96 Turbo Miniprep protocols are performed.

RNA in the eluate

a)	RNase A digestion omitted	Ensure that RNase A is added to Buffer P1 before use.
b)	RNase A digestion insufficient	Reduce culture volume if necessary. If Buffer P1 containing RNase A is more than 6 months old, add additional RNase A.

Genomic DNA in the eluate

a)	Buffer P2 added incorrectly	The lysate must be handled gently after addition of Buffer P2 to prevent shearing. Reduce culture volume if lysate is too viscous for gentle mixing.
b)	Buffer N3 added incorrectly	Upon addition of Buffer N3 in step 3, mix immediately but gently.
c)	Lysis too long	Lysis in step 2 must not exceed 5 minutes.
d)	Culture overgrown	Overgrown cultures contain lysed cells and degraded DNA. Do not grow cultures for longer than 12–16 hours.

Appendix A: Background Information

Growth of bacterial cultures

Plasmids are generally prepared from bacterial cultures grown in the presence of a selective agent such as an antibiotic (3,4). The yield and quality of plasmid DNA may depend on factors such as plasmid copy number, host strain, inoculation, antibiotic, and type of culture medium.

Plasmid copy number

Plasmids vary widely in their copy number per cell (Table 5), depending on their origin of replication (e.g., pMB1, ColE1, or pSC101) which determines whether they are under relaxed or stringent control; and depending on the size of the plasmid and its associated insert. Some plasmids, such as the pUC series and derivatives, have mutations which allow them to reach very high copy numbers within the bacterial cell. Plasmids based on pBR322 and cosmids are generally present in lower copy numbers. Very large plasmids and cosmids are often maintained at very low copy numbers per cell.

Table 5. Origins of replication and copy numbers of various plasmids (3).

DNA construct	Origin of replication	Copy number	Classification
Plasmids			
pUC vectors	pMB1*	500–700	high copy
pBluescript vectors	ColE1	300–500	high copy
pGEM® vectors	pMB1*	300–400	high copy
pTZ vectors	pMB1*	>1000	high copy
pBR322 and derivatives	pMB1*	15–20	low copy
pACYC and derivatives	p15A	10–12	low copy
pSC101 and derivatives	pSC101	~5	very low copy
Cosmids			
SuperCos	ColE1	10–20	low copy
pWE15	ColE1	10–20	low copy

* The pMB1 origin of replication is closely related to that of ColE1 and falls in the same incompatibility group. The high-copy-number plasmids listed here contain mutated versions of this origin.

Host strains

Most *E. coli* strains can be used successfully to isolate plasmid DNA, although the strain used to propagate a plasmid has an effect on the quality of the purified DNA. Host strains such as DH1, DH5α, and C600 give high-quality DNA. The slower growing strain XL1-Blue also yields DNA of very high-quality which works extremely well for sequencing. Strain HB101 and its derivatives, such as TG1 and the JM series, produce large amounts of carbohydrates, which are released during lysis and can inhibit enzyme activities if not completely removed (4). In addition, these strains have high levels of endonuclease activity which can reduce DNA quality. The methylation and growth characteristics of the strain should also be taken into account when selecting a host strain. XL1-Blue and DH5α are highly recommended for reproducible and reliable results.

Inoculation

Bacterial cultures for plasmid preparation should always be grown from a single colony picked from a freshly streaked selective plate. Subculturing directly from glycerol stocks, agar stabs, and liquid cultures may lead to uneven plasmid yield or loss of the plasmid. Inoculation from plates that have been stored for a long time may also lead to loss or mutation of the plasmid.

The desired clone should be streaked from a glycerol stock onto a freshly prepared agar plate containing the appropriate selective agent so that single colonies can be isolated. This procedure should then be repeated to ensure that a single colony of an antibiotic-resistant clone can be picked. A single colony should be inoculated into 1–5 ml of media containing the appropriate selective agent, and grown with vigorous shaking for 12–16 hours. Growth for more than 16 hours is not recommended since cells begin to lyse and plasmid yields may be reduced.

Antibiotics

Antibiotic selection should be applied at all stages of growth. Many plasmids in use today do not contain the *par* locus which ensures that the plasmids segregate equally during cell division. Daughter cells that do not receive plasmids will replicate much faster than plasmid-containing cells in the absence of selective pressure, and can quickly take over the culture.

The stability of the selective agent should also be taken into account. Resistance to ampicillin, for example, is mediated by β-lactamase which is encoded by the plasmid-linked *bla* gene and which hydrolyzes ampicillin. Levels of ampicillin in the culture medium are thus continually depleted. This phenomenon is clearly demonstrated on ampicillin plates, where "satellite colonies" appear as the ampicillin is hydrolyzed in the vicinity of a growing colony. Ampicillin is also very sensitive to temperature, and when in solution should be stored frozen in single-use aliquots. The recommendations given in Table 6 are based on these considerations.

Table 6. Concentrations of Commonly Used Antibiotics

Antibiotic	Stock solutions Concentration	Stock solutions Storage	Working concentration (dilution)
Ampicillin (sodium salt)	50 mg/ml in water	–20°C	100 µg/ml (1/500)
Chloramphenicol	34 mg/ml in ethanol	–20°C	170 µg/ml (1/200)
Kanamycin	10 mg/ml in water	–20°C	50 µg/ml (1/200)
Streptomycin	10 mg/ml in water	–20°C	50 µg/ml (1/200)
Tetracycline HCl	5 mg/ml in ethanol	–20°C	50 µg/ml (1/100)

Culture media

Luria-Bertani (LB) broth is the recommended culture medium for use with QIAprep Kits, since richer broths such as TB (Terrific Broth) or 2x YT lead to extremely high cell densities, which can overload the purification system. It should be noted that cultures grown in TB may yield 2–5 times the number of cells compared to cultures grown in LB broth. If these media are used, recommended culture volumes must be reduced to match the capacity of the QIAprep membrane. If excess culture volume is used, alkaline lysis will be inefficient, the QIAprep membrane will be overloaded, and the performance of the system will be unsatisfactory. Furthermore, the excessive viscosity of the lysate will require vigorous mixing, which may result in shearing of bacterial genomic DNA and contamination of the plasmid DNA. Care must also be taken if strains are used which grow unusually fast or to very high cell densities. In such cases, doubling the volumes of Buffers P1, P2, and N3 may be beneficial. It is best to calculate culture cell density and adjust the volume accordingly.

Please note that a number of slightly different LB culture broths, containing different concentrations of NaCl, are in common use. Although different LB broths produce similar cell densities after overnight culture, plasmid yields can vary significantly.

Table 7. Recommended composition of Luria Bertani medium

Contents	Per liter
Tryptone	10 g
Yeast extract	5 g
NaCl	10 g

Preparation of cell lysates

Bacteria are lysed under alkaline conditions. After harvesting and resuspension, the bacterial cells are lysed in NaOH/SDS (Buffer P2) in the presence of RNase A (2, 5). SDS solubilizes the phospholipid and protein components of the cell membrane, leading to lysis and release of the cell contents while the alkaline conditions denature the chromosomal and plasmid DNAs, as well as proteins. The optimized lysis time allows maximum release of plasmid DNA without release of chromosomal DNA, while minimizing the exposure of the plasmid to denaturing conditions. Long exposure to alkaline conditions may cause the plasmid to become irreversibly denatured (2). This denatured form of the plasmid runs faster on agarose gels and is resistant to restriction enzyme digestion.

The lysate is neutralized and adjusted to high-salt binding conditions in one step by the addition of Buffer N3. The high salt concentration causes denatured proteins, chromosomal DNA, cellular debris, and SDS to precipitate, while the smaller plasmid DNA renatures correctly and stays in solution. It is important that the solution is thoroughly and gently mixed to ensure complete precipitation.

To prevent contamination of plasmid DNA with chromosomal DNA, vigorous stirring and vortexing must be avoided during lysis. Separation of plasmid from chromosomal DNA is based on coprecipitation of the cell wall-bound chromosomal DNA with insoluble complexes containing salt, detergent, and protein. Plasmid DNA remains in the clear supernatant. Vigorous treatment during the lysis procedure will shear the bacterial chromosome, leaving free chromosomal DNA fragments in the supernatant. Since chromosomal fragments are chemically indistinguishable from plasmid DNA under the conditions used, the two species will not be separated on QIAprep membrane and will elute under the same low-salt conditions. Mixing during the lysis procedure must therefore be carried out by slow, gentle inversion of the tube.

Appendix B: Agarose Gel Analysis of Plasmid DNA

The QIAprep Miniprep procedure can be analyzed using agarose gel electrophoresis as shown in Figure 6. Samples can be taken from the cleared lysate and its flow-through, precipitated with isopropanol and resuspended in a minimal volume of TE buffer. In Figure 6 the cleared lysate shows closed circular plasmid DNA and degraded RNase A-resistant RNA. The flow-through contains only degraded RNA and no plasmid DNA is present. The eluted pure plasmid DNA shows no contamination with other nucleic acids.

Agarose Gel Analysis

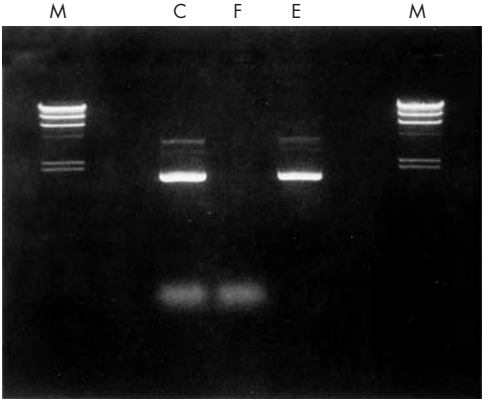

Figure 6 Agarose gel analysis of the QIAprep Miniprep procedure. **C**: cleared lysate; **F**: flow-through; **E**: eluted plasmid; **M**: markers.

Appendix C: Special Applications

Purification of low-copy plasmids and cosmids

All QIAprep miniprep protocols in this handbook can be used for preparation of low-copy-number plasmid or cosmids from 1–10 ml overnight *E. coli* cultures grown in LB medium.

Only two slight modifications to the protocols are required:

- The wash step with Buffer PB is required for all strains.
- When plasmid or cosmids are >10 kb, pre-heat Buffer EB (or water) to 70°C prior to eluting DNA from the QIAprep membrane. A 10 ml overnight LB culture typically yields 5–10 µg DNA.

Note: When using 10 ml culture volume, it is recommended to double the volumes of Buffers P1, P2, and N3 used.

Purification of very large plasmids (>50 kb)

Plasmids >50 kb elute less efficiently from silica than smaller plasmids, but do elute efficiently from QIAGEN anion-exchange resin. QIAGEN provides the anion-exchange-based QIAGEN Large-Construct Kit for efficient large-scale purification of ultrapure genomic DNA-free BAC, PAC, P1, or cosmid DNA. For high-throughput, small-scale purification of BACs, PACs, and P1s, an optimized alkaline lysis protocol in R.E.A.L.® Prep 96 Kits yields DNA suitable for sequencing and screening. Call QIAGEN Technical Services or your local distributor for more information on these kits, or see ordering information on page 47.

Purification of plasmid DNA prepared by other methods

Plasmid DNA isolated by other methods can be further purified using QIAprep modules and any of the QIAprep protocols in this handbook.

1. Add 5 volumes of Buffer PB to 1 volume of the DNA solution and mix (e.g., add 500 µl Buffer PB to 100 µl of DNA sample).
2. Apply the samples to QIAprep spin columns or to the wells of a QIAprep 8 strip or 96-well plate. Draw the samples through the QIAprep membrane by centrifugation or vacuum, and continue the appropriate protocol at the Buffer PE wash step. The optional wash step with Buffer PB is not necessary.

References

1. Vogelstein, B., and Gillespie, D. (1979) Preparative and analytical purification of DNA from agarose. Proc. Natl. Acad. Sci. USA **76**, 615–619.
2. Birnboim, H.C., and Doly, J. (1979) A rapid alkaline lysis procedure for screening recombinant plasmid DNA. Nucleic Acids Res. **7**, 1513–1522.
3. Sambrook, J. et al., eds. (1989) Molecular cloning: a laboratory manual. 2nd ed., Cold Spring Harbor Laboratory Press.
4. Ausubel, F.M. et al., eds. (1991) Current protocols in molecular biology. Wiley Interscience, New York.
5. Birnboim, H.C. (1983) A rapid alkaline extraction method for the isolation of plasmid DNA. Methods Enzymol. **100**, 243–255.

Ordering Information

Product	Contents	Cat. no.
QIAprep Spin Miniprep Kit (50)	For 50 plasmid minipreps: 50 QIAprep Spin Columns, Reagents, Buffers, Collection Tubes (2 ml)	27104
QIAprep Spin Miniprep Kit (250)	For 250 plasmid minipreps: 250 QIAprep Spin Columns, Reagents, Buffers, Collection Tubes (2 ml)	27106
QIAprep 8 Miniprep Kit (50)*	For 50 x 8 plasmid minipreps: 50 QIAprep 8 Strips, Reagents, Buffers, Collection Microtubes (1.2 ml), Caps	27144
QIAprep 8 Turbo Miniprep Kit (10)*	For 10 x 8 plasmid minipreps: 10 TurboFilter 8 Strips, 10 QIAprep 8 Strips, Reagents, Buffers, Collection Microtubes (1.2 ml), Caps	27152
QIAprep 8 Turbo Miniprep Kit (50)*	For 50 x 8 plasmid minipreps: 50 TurboFilter 8 Strips, 50 QIAprep 8 Strips, Reagents, Buffers, Collection Microtubes (1.2 ml), Caps	27154
QIAprep 8 Turbo BioRobot Kit (48)	For 48 x 8 plasmid minipreps, 48 each: TurboFilter 8 and QIAprep 8 Strips, Reagents, Buffers, Collection Microtubes (1.2 ml), Caps, 96-Well Microplates RB and Lids	962134
QIAprep 96 Turbo Miniprep Kit (4)†	For 4 x 96 plasmid minipreps: 4 TurboFilter 96 Plates, 4 QIAprep 96 Plates, 4 Flat-Bottom Blocks with Lids, Reagents, Buffers, Collection Microtubes (1.2 ml), Caps	27191
QIAprep 96 Turbo Miniprep Kit (24)†	For 24 x 96 Plasmid minipreps: 24 x TurboFilter 96 Plates, 24 x QIAprep 96 Plates, 24 Flat-Bottom Blocks with Lids, Reagents, Buffers, Collection Microtubes (1.2 ml), Caps	27193

* Requires the use of QIAvac 6S.
† Requires the use of QIAvac 96.

Ordering Information

Product	Contents	Cat. no.
QIAprep 96 Turbo BioRobot Kit (4)	For 4 x 96 plasmid minipreps, 4 each: TurboFilter 96 and QIAprep 96 Plates, Flat-Bottom Blocks and Lids, Reagents, Buffers, Collection Microtubes (1.2 ml), Caps, 96-Well Microplates RB and Lids, Tape Pads	962141
DirectPrep 96 Kits — for high-throughput plasmid DNA purification		
DirectPrep 96 Miniprep Kit (4)*	For 4 x 96 plasmid Minipreps: 4 DirectPrep 96 Plates, Reagents, Buffers, Flat-Bottom Blocks and Lids, Air Pore Tape Sheets, Tape Pads, Elution Microtubes RS, Caps	27361
DirectPrep 96 BioRobot Kit (4)†	For 4 x 96 plasmid Minipreps: 4 DirectPrep 96 Plates, Reagents, Buffers, Flat-Bottom Blocks and Lids, 96-Well Microplates RB, AirPore Tape Sheets, Tape Pads	962341
Related products for BAC/PAC/P1 purification		
QIAGEN® Large-Construct Kit (10)	10 QIAGEN-tip 500, Reagents, Buffers, ATP-Dependent Exonuclease‡	12462
R.E.A.L. Prep 96 Plasmid Kit (4)§	For 4 x 96 rapid extraction alkaline lysis minipreps: 4 QIAfilter 96 Plates, Square-Well Blocks, Tape Pads, Reagents, Buffers	26171
R.E.A.L. Prep 96 BioRobot Kit (4)	For 4 x 96 rapid extraction alkaline lysis minipreps: 4 QIAfilter 96 Plates, Flat-Bottom Blocks and Lids, Square-Well Blocks, Reagents, Buffers, Tape Pads	961141
QIAvac and accessories		
QIAvac 24 Plus	Vacuum manifold for processing 1–24 spin columns: includes QIAvac 24 Plus Vacuum Manifold, Luer Plugs, Quick Couplings	19413

* Requires use of QIAvac Multiwell. Larger kit sizes available, please inquire.
† For use with BioRobot 3000 or 8000 workstations. Larger kit sizes available, please inquire.
‡ ATP solution required for exonuclease digestion is not provided.
§ Requires use of QIAvac 96.

Ordering Information

Product	Contents	Cat. no.
QIAvac 6S	Vacuum manifold for processing 1–6 QIAGEN 8-well strips: includes QIAvac 6S Top Plate with flip-up lid, Base, Waste Tray, Blanks, Strip Holder Rock of Collection Microtubes (1.2 ml)	19503
QIAvac 96	Vacuum manifold for processing QIAGEN 96-well plates: includes QIAvac 96 Top Plate, Base, Waste Tray, Plate Holder Rock of Collection Microtubes (1.2 ml)	19504
QIAvac Luer Adapter Set*	For processing 1–24 QIAprep Spin Columns: 6 adapters, each with 4 luer connectors, 24 plugs	19541
Vacuum Regulator	For use with QIAvac manifolds	19530
Vacuum Pump (100 V, 50/60 Hz)	Universal vacuum pump	84000
Vacuum Pump (115 V, 60 Hz)	Universal vacuum pump	84010
Vacuum Pump (230 V, 50 Hz)	Universal vacuum pump	84020
Individual Buffers and accessories		
Buffer N3	500 ml Buffer N3	19064
Buffer PB	500 ml Buffer PB	19066
Buffer PE (concentrate)	100 ml Buffer PE (concentrate)	19065
RNase A	250 mg RNase A (70 U/mg; 100 mg/ml)	19101
Collection Tubes (2 ml)	1000 collection tubes (2 ml)	19201
Collection Microtubes (racked)	Nonsterile polypropylene tubes (1.2 ml), 960 in racks of 96	19560
Collection Microtube Caps	Nonsterile polypropylene caps for collection microtubes (1.2 ml), 960 in strips of 8, loose in bag	19566
Flat-Bottom Blocks (24)	96-well blocks with 2 ml wells, 24 blocks per case	19579

* Compatible only with QIAvac Top Plates containing flip-up lid.

Ordering Information

Product	Contents	Cat. no.
Tape Pads (5)	Adhesive tape sheets for sealing multiwell plates and blocks: 25 sheets per pad, 5 pads per pack	19570
AirPore Tape Sheets (50)	Microporous tape sheets for covering 96-well blocks during bacterial cultivation: 50 sheets per pack	19571

Notes

QIAGEN Companies

Please see the back cover for contact information for your local QIAGEN office.

QIAGEN Distributors

Argentina
Tecnolab S. A.
Tel: (011) 4555 0010
Fax: (011) 4553 3331
E-mail: info@tecnolab.com.ar
Web site: www.tecnolab.com.ar

Brazil
Uniscience do Brasil
Tel: 011 3622 2320
Fax: 011 3622 2323
E-mail: info@uniscience.com
Web site: www.uniscience.com

Chile
Biosonda SA
Tel: 562 209 6770
Fax: 562 274 5462
E-mail: ventas@biosonda.cl
Web site: www.biosonda.cl

Croatia
INEL Medicinska Tehnika d.o.o.
Tel: (01) 2984-898
Fax: (01) 6520-966
E-mail:
inel-medicinska-tehnika@zg.htnet.hr

Cyprus
Scientronics Ltd
Tel: 02-357 22 765416
Fax: 02-357 22 764614
E-mail:
a.sarpetsas@biotronics.com.cy

Czech Republic
BIO-CONSULT spol. s.r.o.
Tel/Fax: (420) 2 417 29 792
E-mail: info@bioconsult.cz
Web site: www.bioconsult.cz

Egypt
Clinilab
Tel: 52 57 212
Fax: 52 57 210
E-mail: Clinilab@link.net

Estonia
PEAI-Est OÜ
Tel: (051) 65 830
Fax: (07) 383 360
E-mail: langel@ut.ee

Greece
BioAnalytica S. A.
Tel: (210)-640 03 18
Fax: (210)-646 27 48
E-mail: bioanalyt@hol.gr
Web site: www.bioanalytica.gr

Hungary
Kasztel-Med Co. Ltd.
Tel: (01) 385 3887
Fax: (01) 381 0695
E-mail: info@kasztel.hu
Web site: www.kasztel.hu

India
Genetix
Tel: (011)-2542 1714
or (011)-2515 9346
Fax: (011)-2546 7637
E-mail: genetix@nda.vsnl.net.in

Israel
Westburg (Israel) Ltd.
Tel: 08-6900655
or 1-800 20 22 20 (toll free)
Fax: 08-6900650
E-mail: info@westburg.co.il
Web site: www.westburg.co.il

Korea
LRS Laboratories, Inc.
Tel: (02) 924-86 97
Fax: (02) 924-86 96
E-mail: webmaster@lrslab.co.kr
Web site: www.lrslab.co.kr

Malaysia
RESEARCH BIOLABS SDN. BHD.
Tel: (603)-8070 3101
Fax: (603)-8070 5101
E-mail: biolabs@tm.net.my
Web site:
www.researchbiolabs.com

Mexico
Quimica Valaner S. A. de C. V.
Tel: (55) 55 25 57 25
Fax: (55) 55 25 56 25
E-mail: ventas@valaner.com
Web site: www.valaner.com

New Zealand
Biolab Ltd
Tel: (09) 980 6700
or 0800 933 966
Fax: (09) 980 6788
E-mail:
biosciences@nzl.biolabgroup.com
Web site:
www.biolabgroup.com/nzl

Poland
Syngen Biotech Sp.z.o.o.
Tel: (071) 798 58 50 - 52
Fax: (071) 798 58 53
E-mail: info@syngen.pl
Web site: www.syngen.pl

Portugal
IZASA PORTUGAL, LDA
Tel: (21) 424 7312
Fax: (21) 417 2674
E-mail: consultasbiotec@izasa.es

Saudi Arabia
Abdulla Fouad Co. Ltd.
Tel: (03) 8324400
Fax: (03) 8346174
E-mail:
sadiq.omar@abdulla-fouad.com

Singapore
Research Biolabs Pte Ltd
Tel: 6777 5366
Fax: 6778 5177
E-mail: sales@researchbiolabs.com
Web site:
www.researchbiolabs.com

Slovak Republic
BIO-CONSULT Slovakia spol. s.r.o.
Tel/Fax: (02) 5022 1336
E-mail: bio-cons@cdicon.sk
Web site: www.bioconsult.cz

Slovenia
MEDILINE d.o.o.
Tel: (01) 830-80-40
Fax: (01) 830-80-70
or (01) 830-80-63
E-mail: mediline@siol.net

South Africa
Southern Cross Biotechnology
(Pty) Ltd
Tel: (021) 671 5166
Fax: (021) 671 7734
E-mail: info@scb.co.za

Spain
IZASA, S. A.
Tel: (93) 902.20.30.90
Fax: (93) 902.22.33.66
E-mail: consultasbiotec@izasa.es

Taiwan
TAIGEN Bioscience Corporation
Tel: (02) 2880 2913
Fax: (02) 2880 2916
E-mail: taigen@ms10.hinet.net

Thailand
Theera Trading Co. Ltd.
Tel: (02) 412-5672
Fax: (02) 412-3244
E-mail: theetrad@samart.co.th

Turkey
Medek Medikal Ürünler
ve Saglik Hizmetleri A. S.
Tel: (216) 302 15 80
Fax: (216) 302 15 88
E-mail: makialp@med-ek.com

All other countries
QIAGEN GmbH, Germany

Australia ▪ **QIAGEN Pty Ltd** ▪ PO Box 641 ▪ DONCASTER VIC 3108
Orders 03-9840-9800 ▪ Fax 03-9840-9888 ▪ Technical 1-800-243-066

Austria ▪ **QIAGEN Vertriebs GmbH** ▪ Löwengasse 47 / Top 6 ▪ A-1030 Wien
Orders: 0800/28-10-10 ▪ Fax: 0800/28-10-19 ▪ Technical: 0800/28-10-11

Belgium ▪ **QIAGEN Benelux B. V**. ▪ Spoorstraat 50 ▪ 5911 KJ Venlo ▪ The Netherlands
Orders 0800-79612 ▪ Fax 0800-79611 ▪ Technical 0800-79556

Canada ▪ **QIAGEN Inc.** ▪ 2800 Argentia Road ▪ Unit 7 ▪ Mississauga ▪ Ontario ▪ L5N 8L2
Orders 800-572-9613 ▪ Fax 800-713-5951 ▪ Technical 800-DNA-PREP (800-362-7737)

China ▪ **QIAGEN China Representative Office** ▪ Room 2213 ▪ POS PLAZA ▪ Century Avenue 1600
Pudong ▪ Shanghai 200122 ▪ Telephone 021-51162555 ▪ Fax 021-51162500

France ▪ **QIAGEN S. A.** ▪ 3 avenue du Canada ▪ LP 809 ▪ 91974 COURTABOEUF CEDEX
Orders 01-60-920-920 ▪ Fax 01-60-920-925 ▪ Technical 01-60-920-930

Germany ▪ **QIAGEN GmbH** ▪ QIAGEN Strasse 1 ▪ 40724 Hilden
Orders 02103-29-12000 ▪ Fax 02103-29-22000 ▪ Technical 02103-29-12400

Italy ▪ **QIAGEN S.p. A.** ▪ Via Grosio, 10/10 ▪ 20151 Milano
Orders 02-33430411 ▪ Fax 02-33430426 ▪ Technical 02-33430414

Japan ▪ **QIAGEN K. K.** ▪ Forefront Tower II ▪ 13-1, Kachidoki 3 Chome ▪ Chuo-ku, Tokyo 104-0054
Telephone 03-5547-0811 ▪ Fax 03-5547-0818 ▪ Technical 03-5547-0811

Luxembourg ▪ **QIAGEN Benelux B. V.** ▪ Spoorstraat 50 ▪ 5911 KJ Venlo ▪ The Netherlands
Orders 8002-2076 ▪ Fax 8002-2073 ▪ Technical 8002-2067

The Netherlands ▪ **QIAGEN Benelux B. V.** ▪ Spoorstraat 50 ▪ 5911 KJ Venlo
Orders 0800-0229592 ▪ Fax 0800-0229593 ▪ Technical 0800-0229602

Switzerland ▪ **QIAGEN AG** ▪ Garstligweg 8 ▪ 8634 Hombrechtikon
Orders 055-254-22-11 ▪ Fax 055-254-22-13 ▪ Technical 055-254-22-12

UK and Ireland ▪ **QIAGEN Ltd.** ▪ QIAGEN House ▪ Fleming Way ▪ Crawley ▪ West Sussex, RH10 9NQ
Orders 01293-422-911 ▪ Fax 01293-422-922 ▪ Technical 01293-422-999

USA ▪ **QIAGEN Inc.** ▪ 27220 Turnberry Lane ▪ Suite 200 ▪ Valencia ▪ CA 91355
Orders 800-426-8157 ▪ Fax 800-718-2056 ▪ Technical 800-DNA-PREP (800-362-7737)

QIAGEN

WWW.QIAGEN.COM

1030984 06/2005